Table Cloth - 2500mm x 1500mm

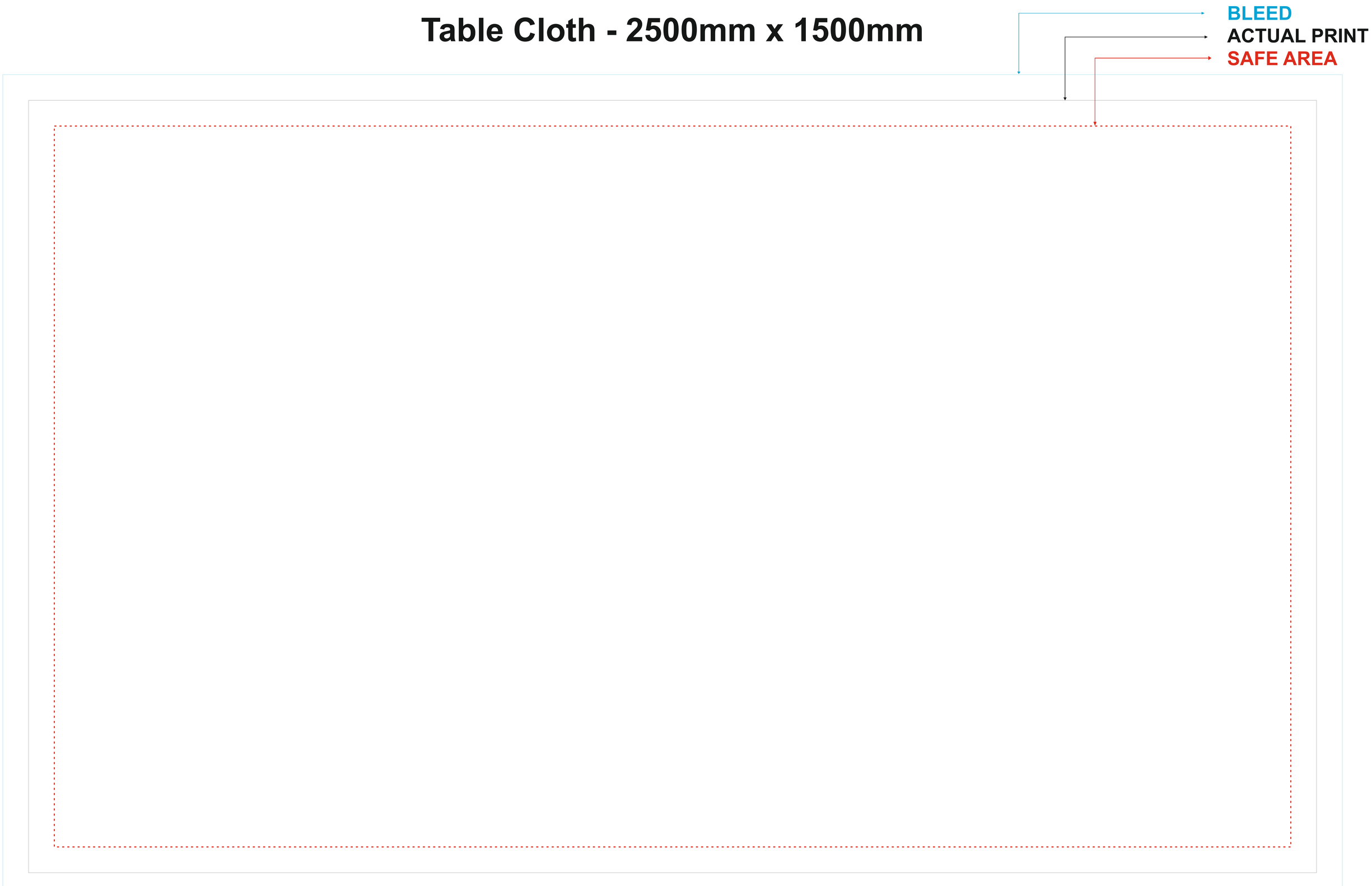
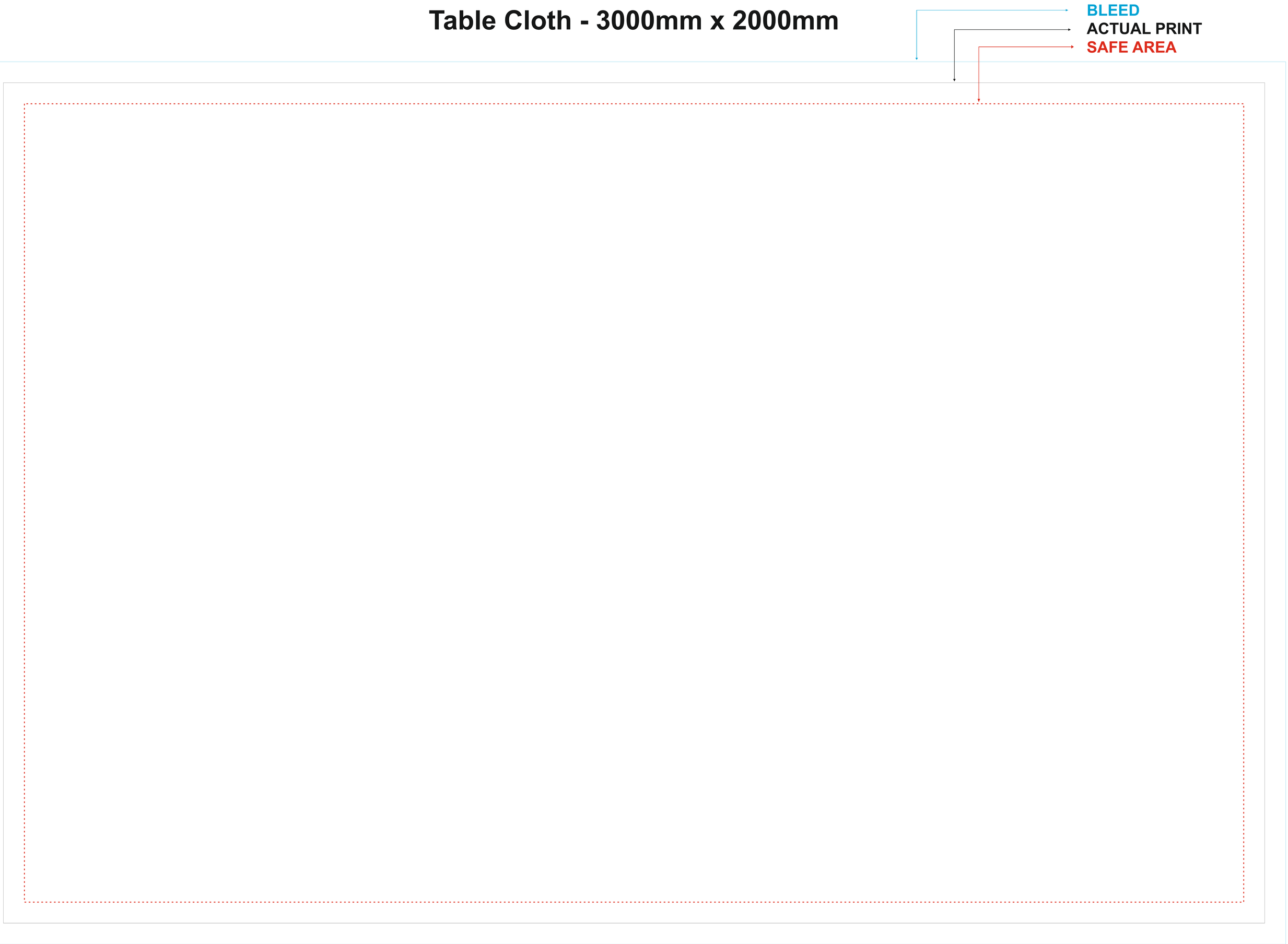
Table Cloth - 3000mm x 2000mm